Access Point WiFi 6 Professional

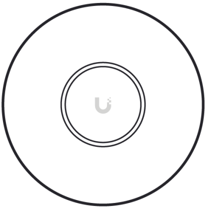

a

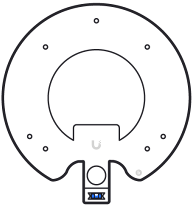

b

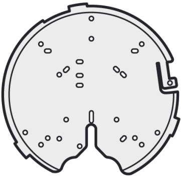

c

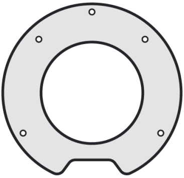

d

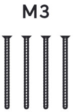

e

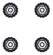

f

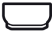

g

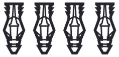

h

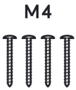

i

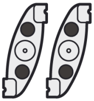

j

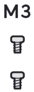

k

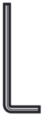

l

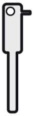

m

1

A

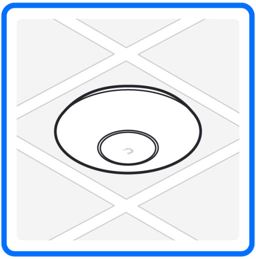

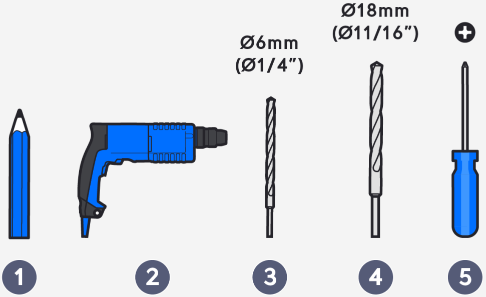
Ø6mm
(Ø1/4”)
Ø18mm
(Ø11/16”)
⊕
1
2
3
4
5

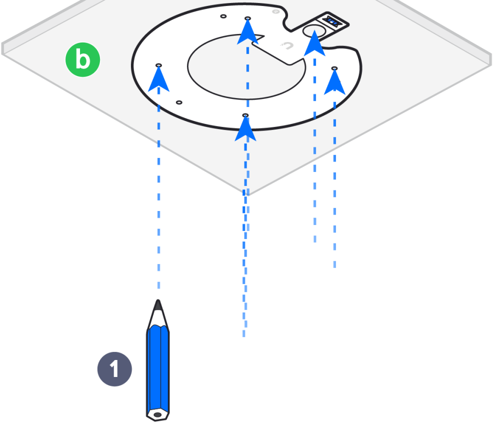

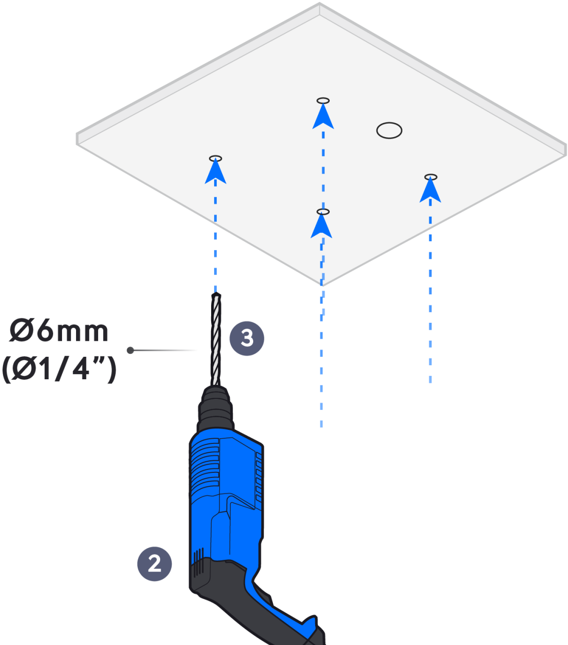

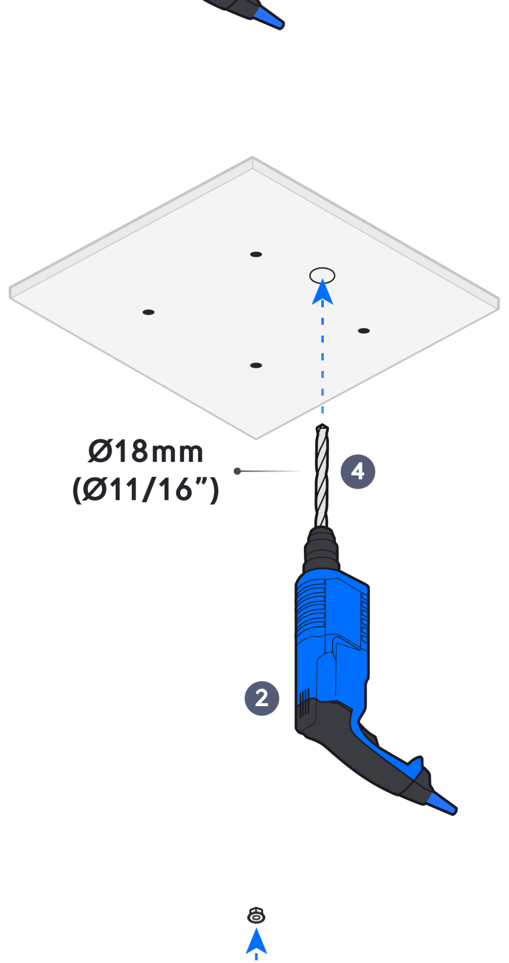

Ø18mm
(Ø11/16”)

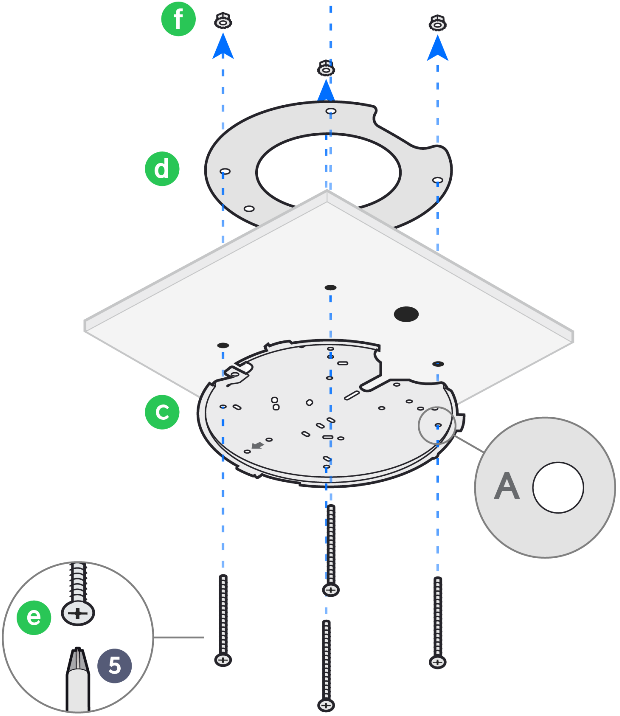

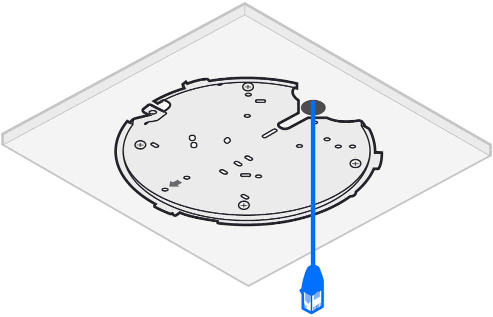

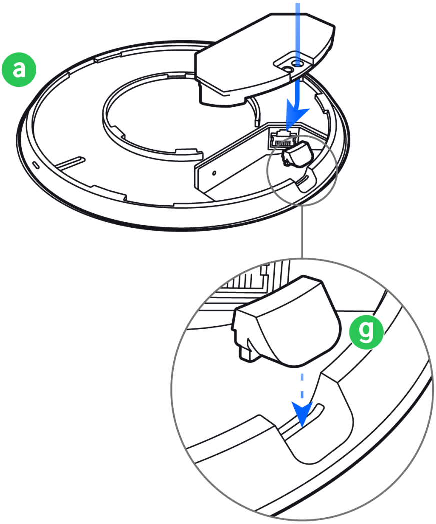

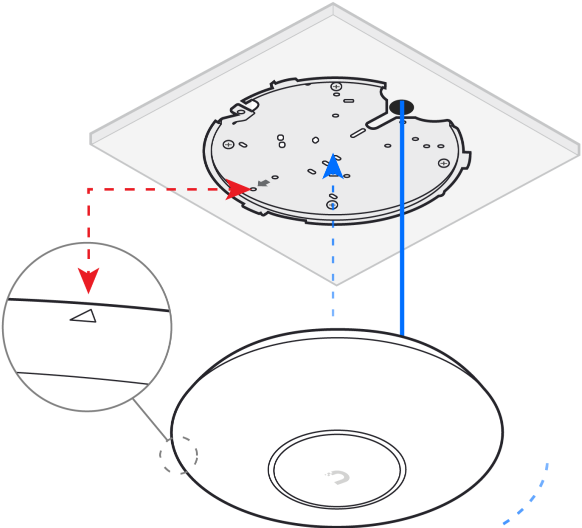

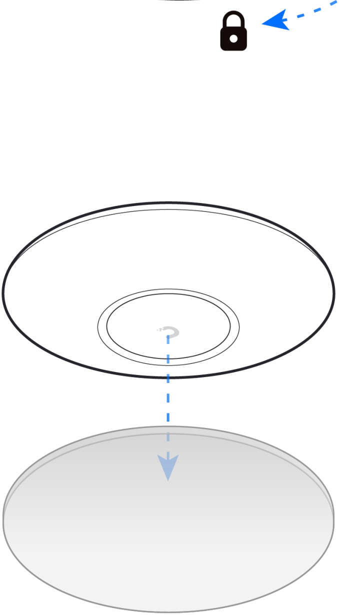

Ⓑ

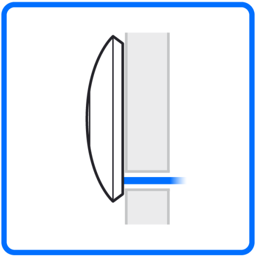

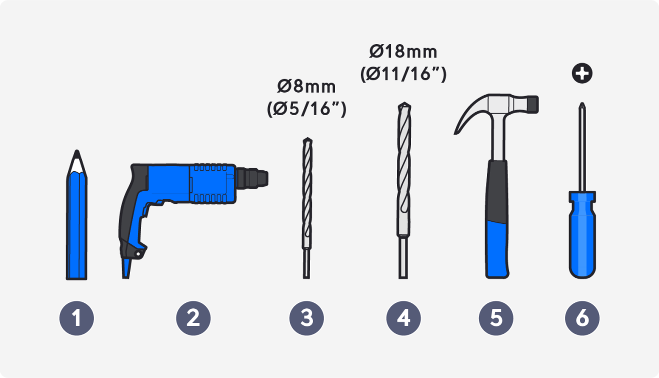
Ø8mm
(Ø5/16”)
Ø18mm
(Ø11/16”)
⊕
1
2
3
4
5
6

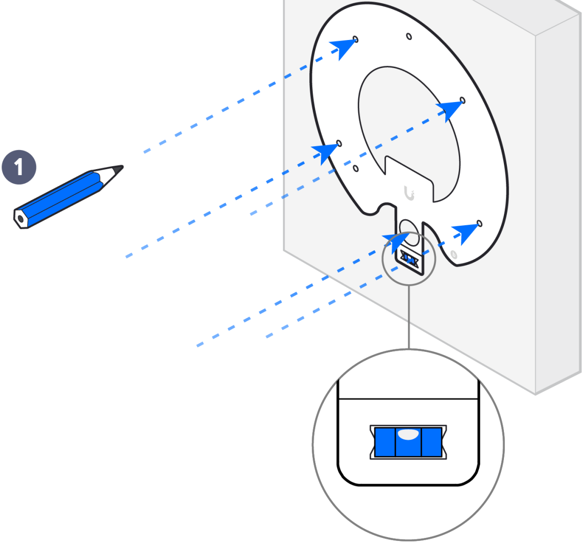

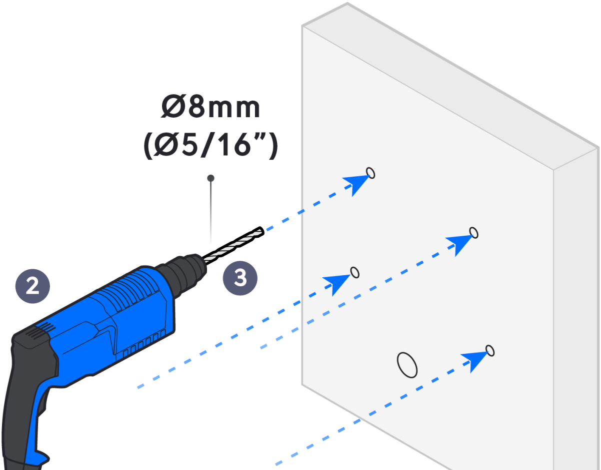
Ø8mm
(Ø5/16”)
2
3

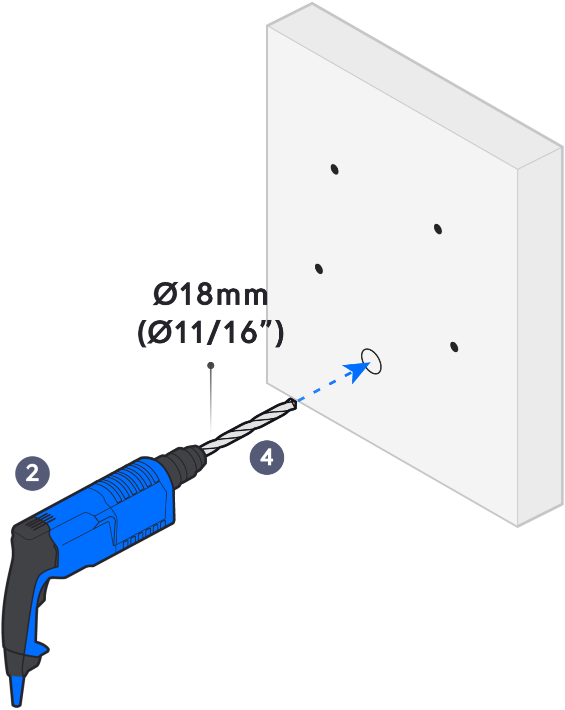
Ø18mm
(Ø11/16”)
2
4

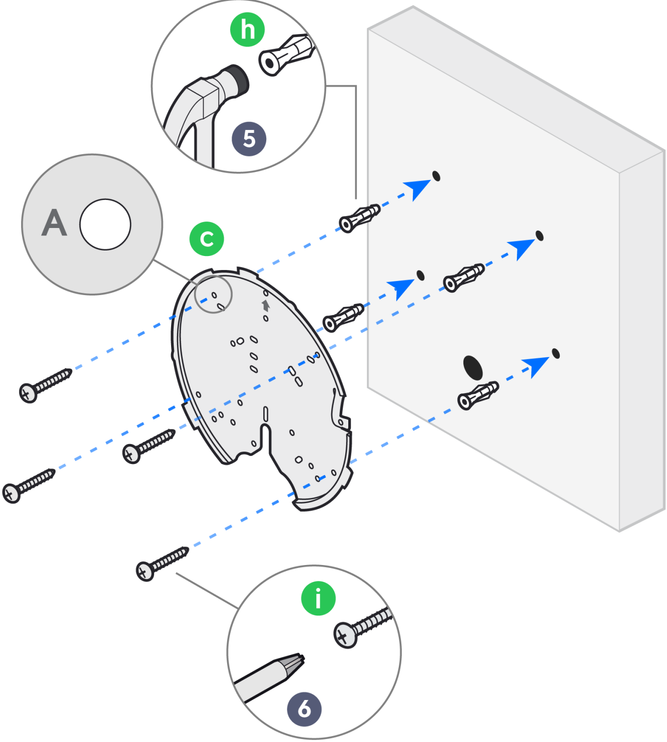

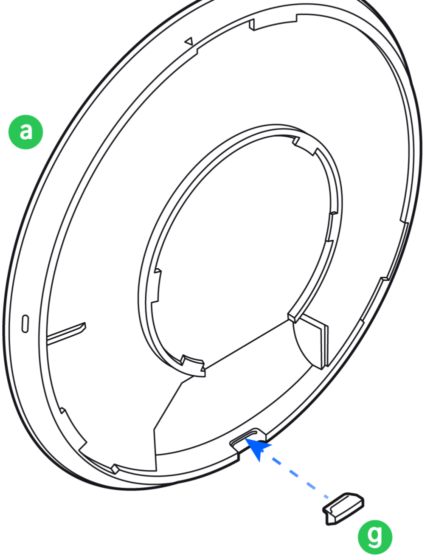

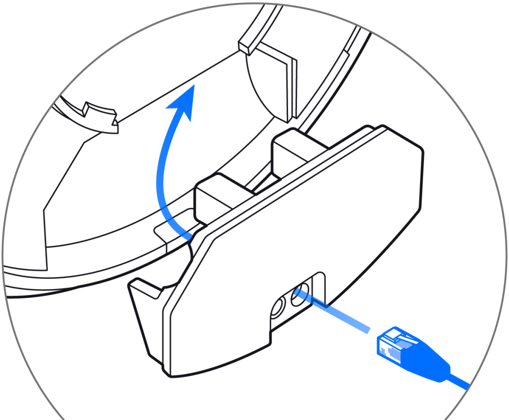

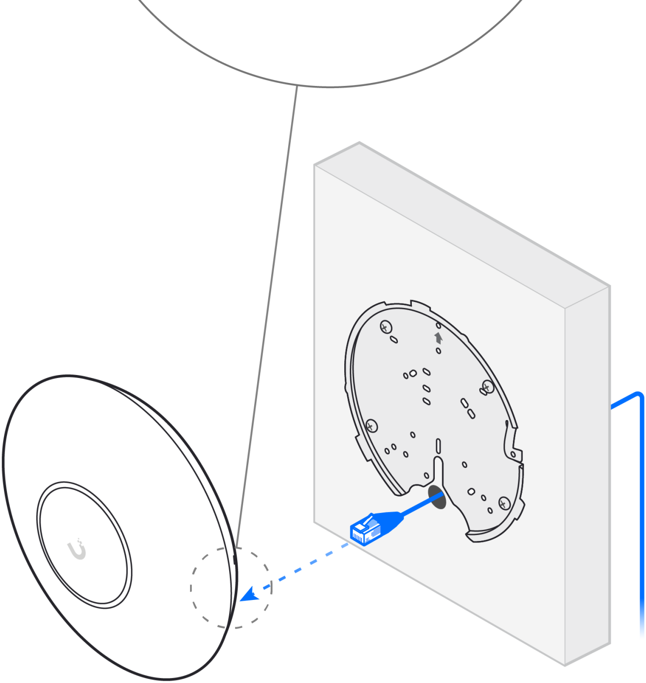

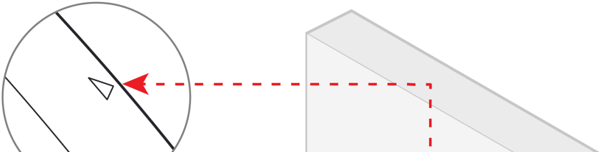

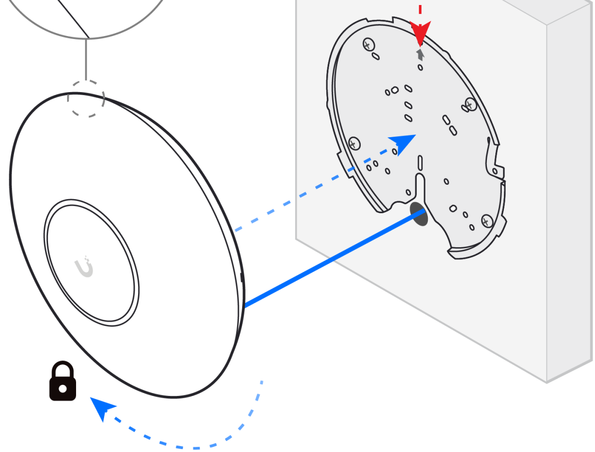

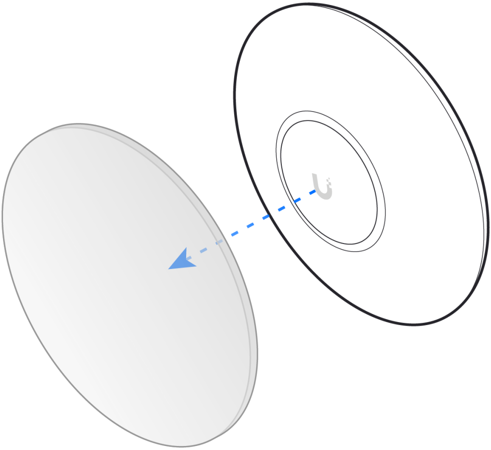

C

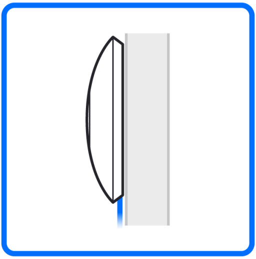

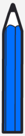

1

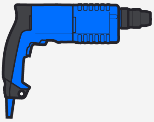

2

Ø8mm
(Ø5/16”)

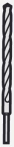

3

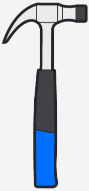

4

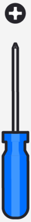

5

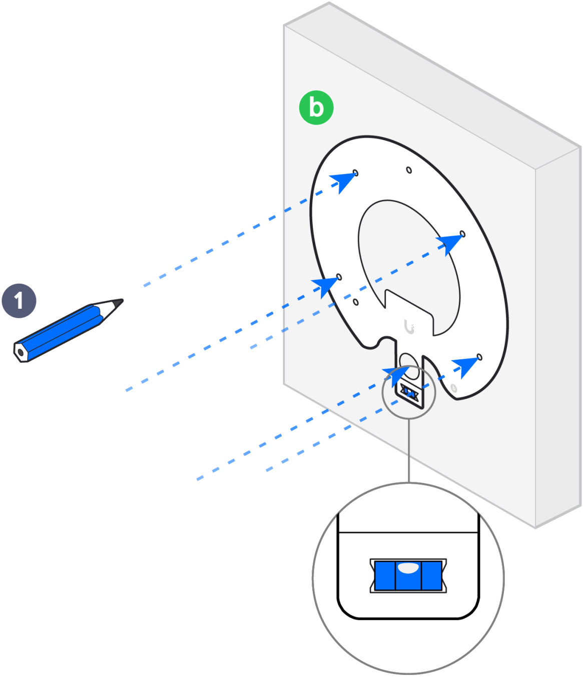

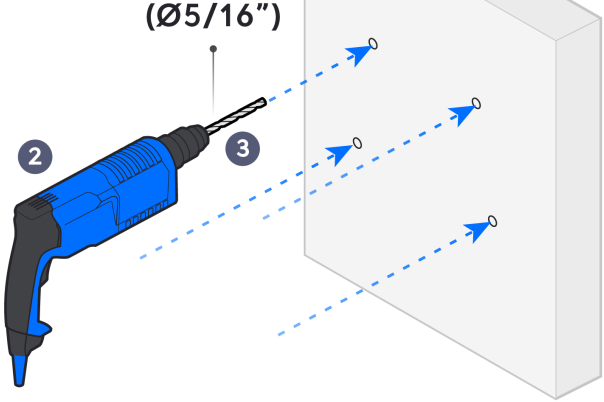

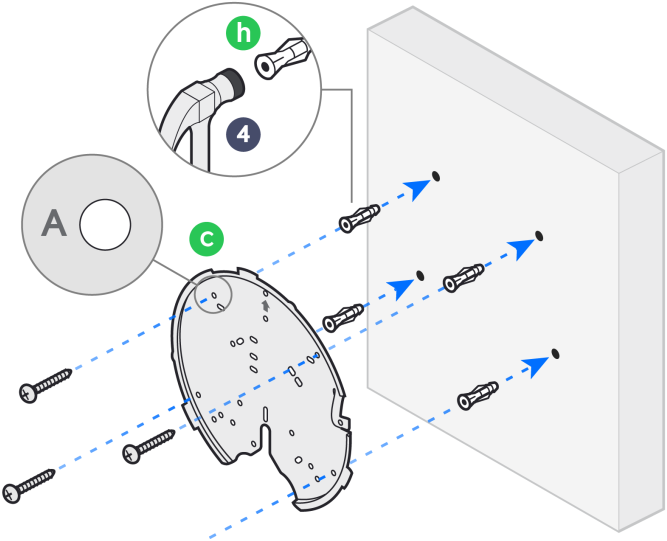

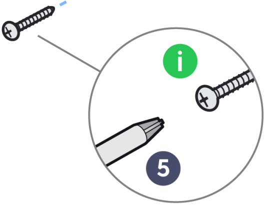

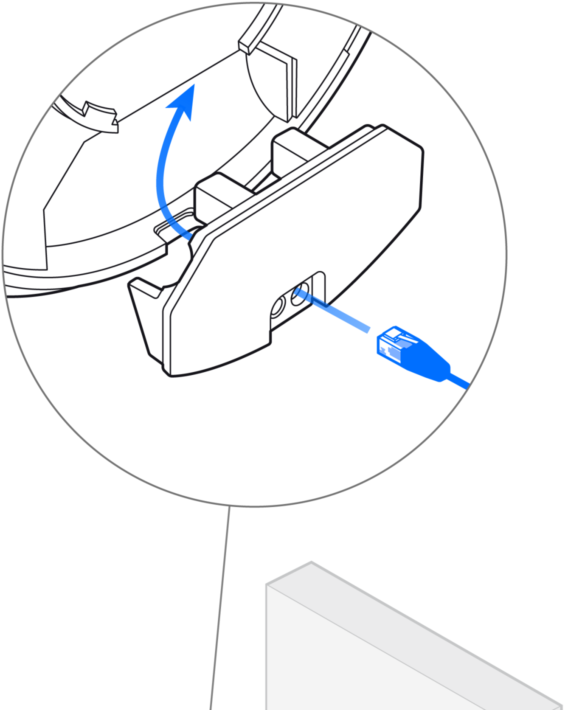

a

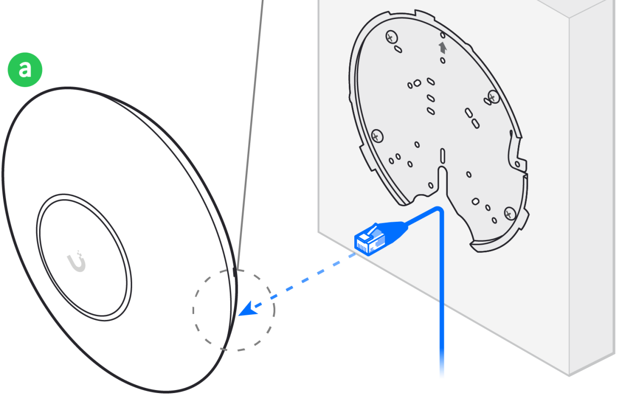

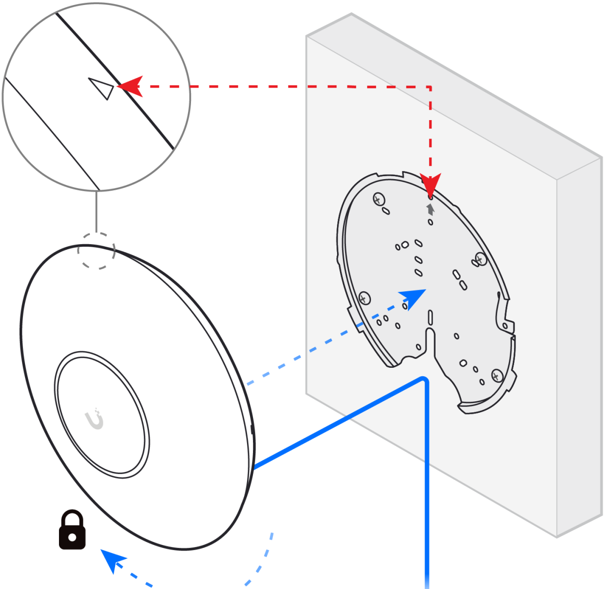

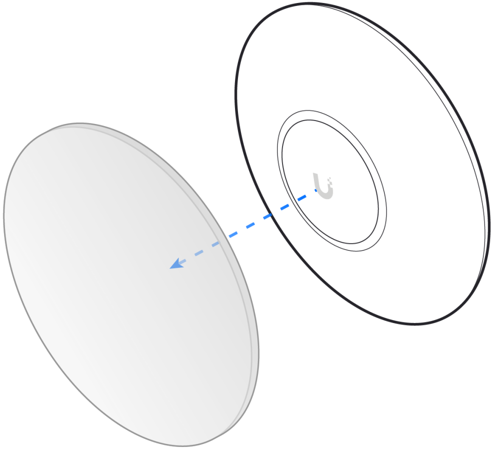

Ⓓ

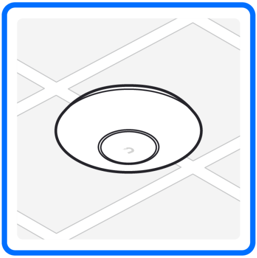

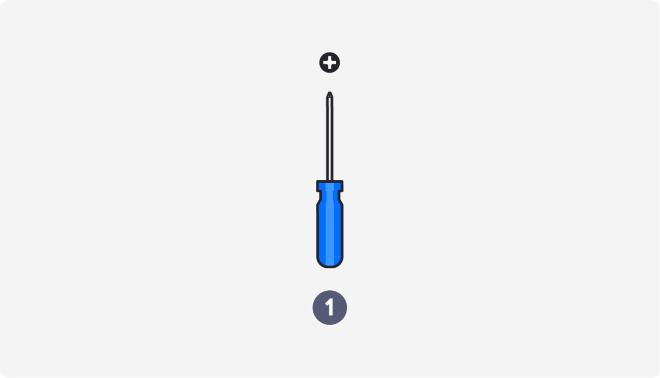

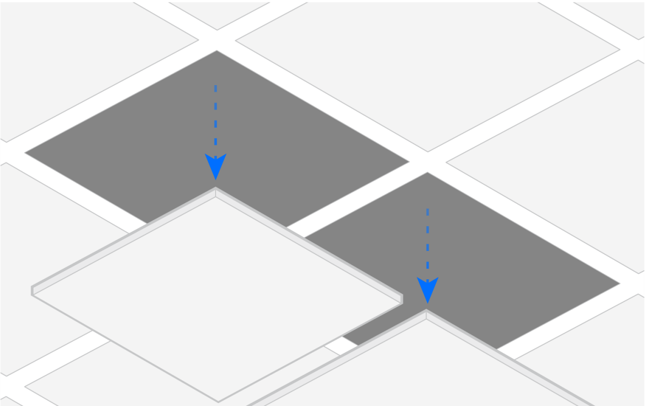

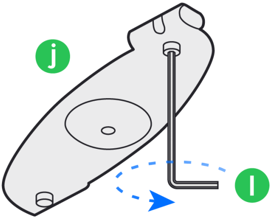

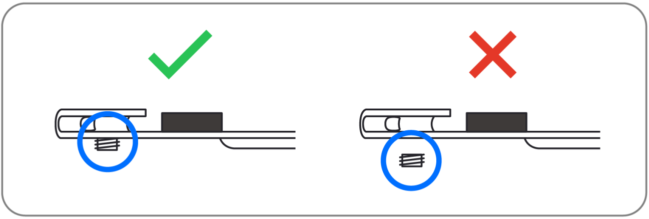

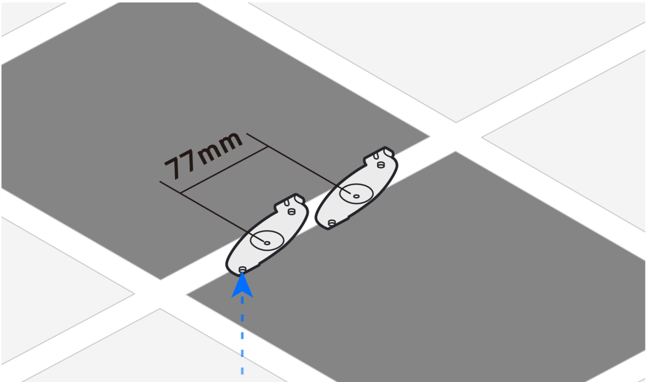

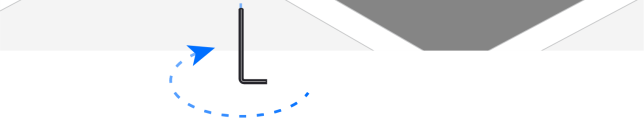

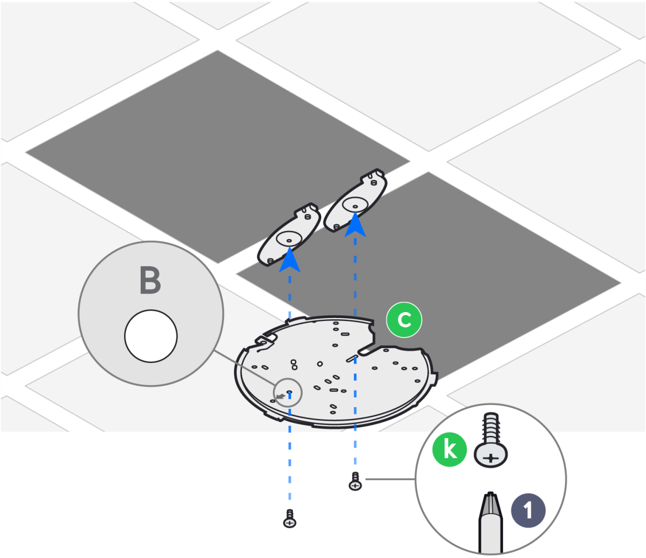

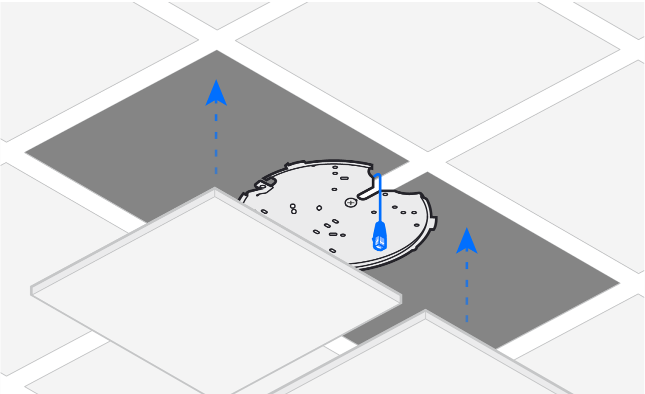

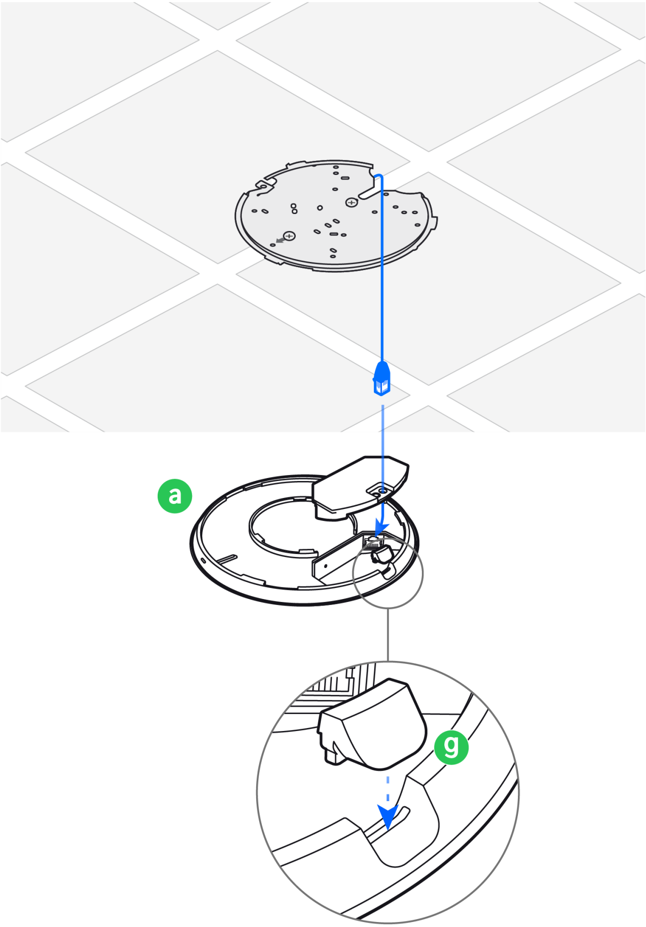

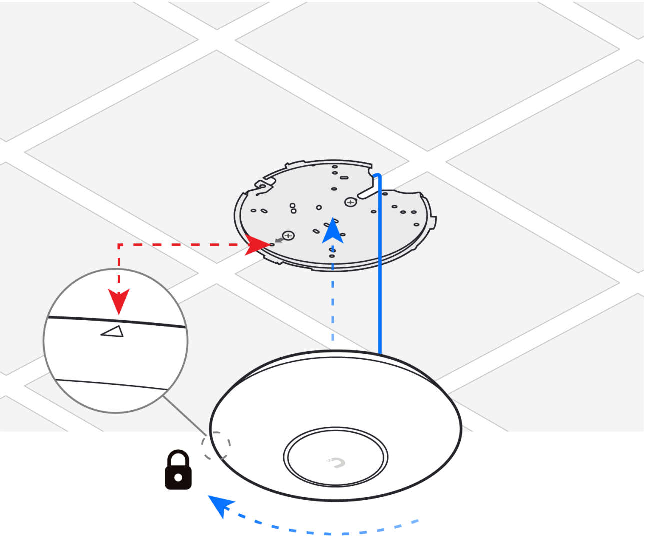

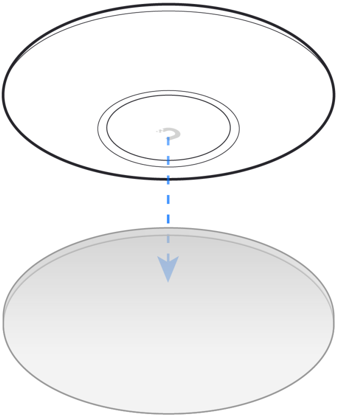

E

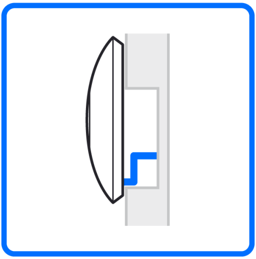

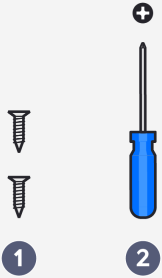

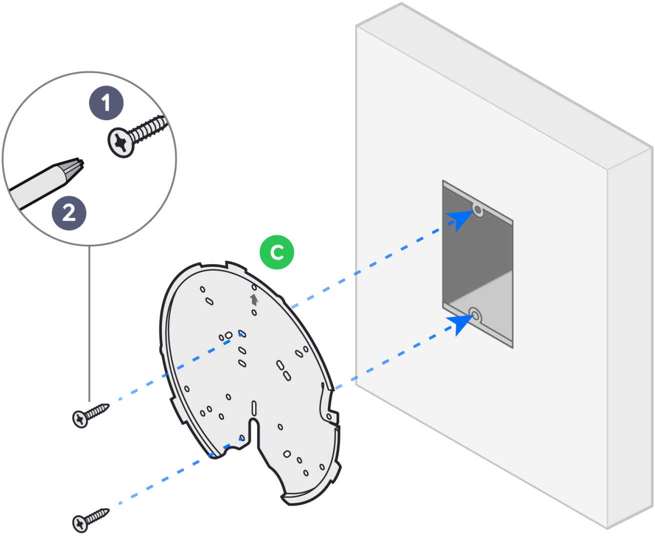

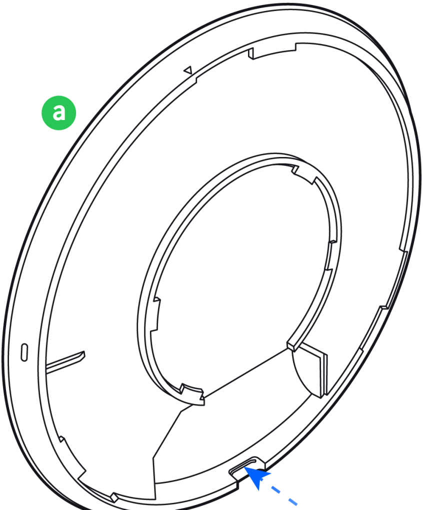

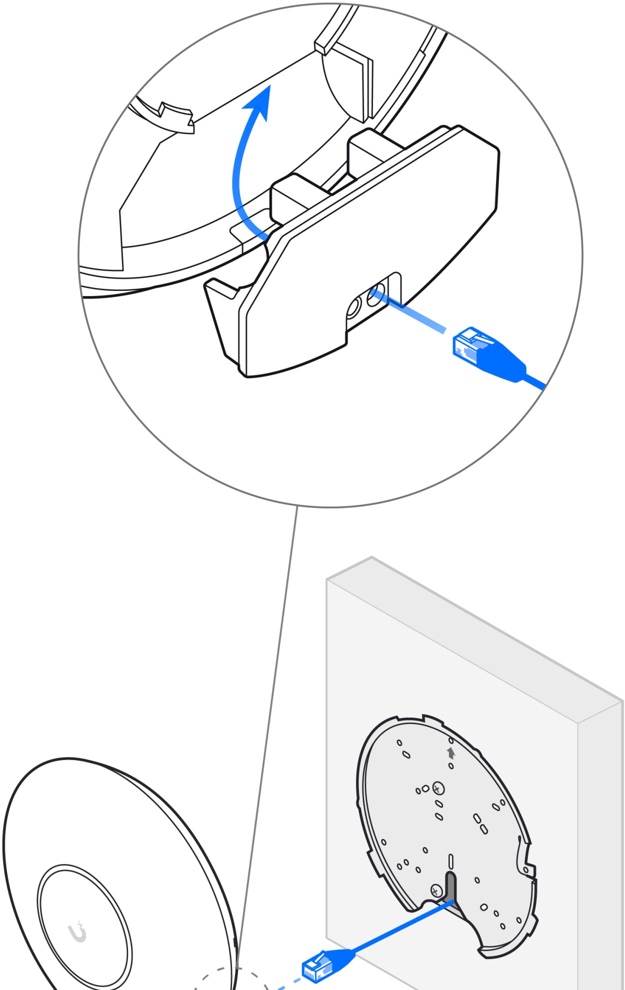

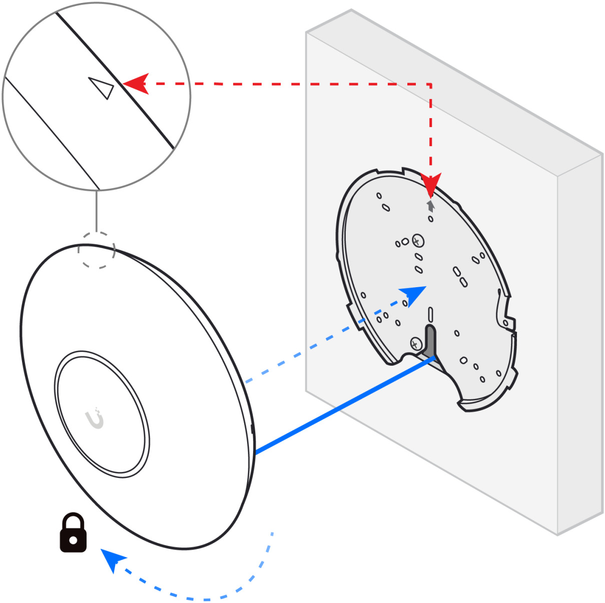

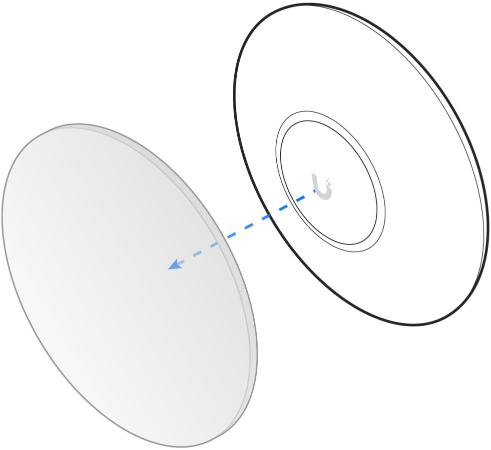

2

Ⓐ

🌐

Ⓑ

🌐

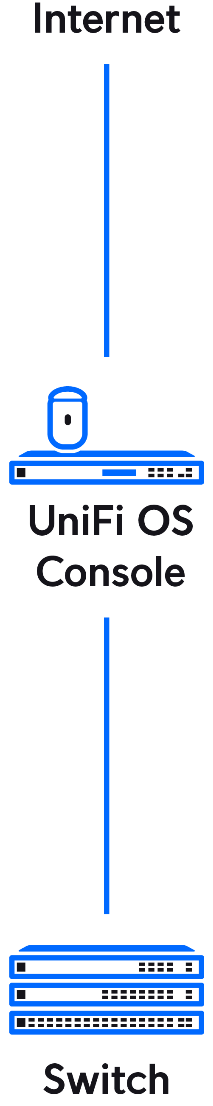
Internet
UniFi OS Console
Switch

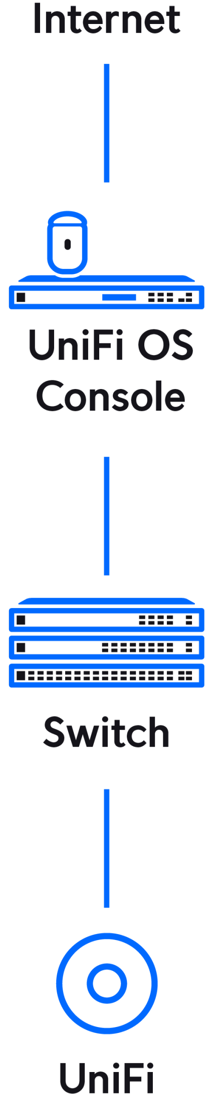
Internet
UniFi OS Console
Switch
UniFi

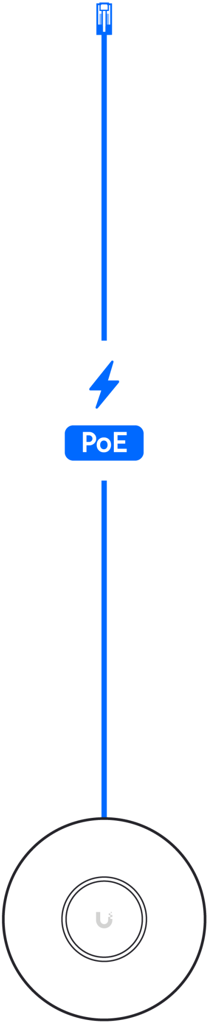

Access Point

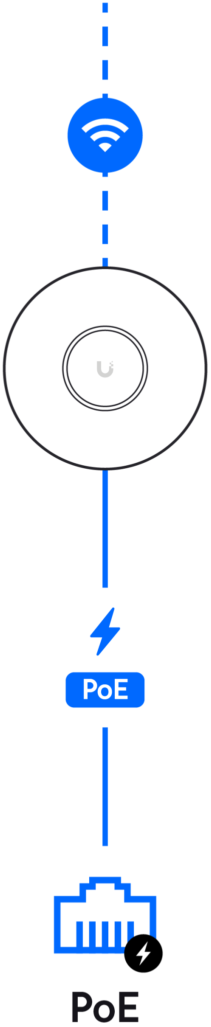

3

Download on the App Store

GET IT ON Google Play

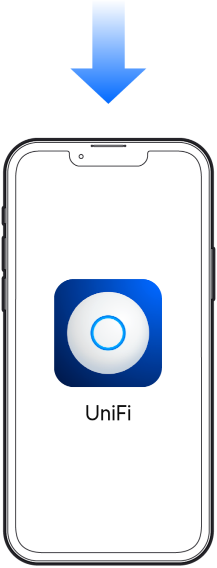

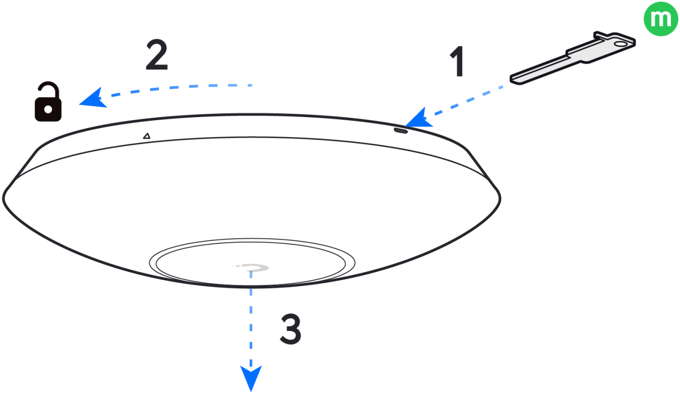

If you need further assistance, visit our Help Center or contact Ubiquiti Support.

©2021 Ubiquiti Inc. All rights reserved. Ubiquiti, Ubiquiti Networks, the Ubiquiti U logo, UniFi, UniFi Network, and the Ubiquiti Access Point trade dress are trademarks or registered trademarks of Ubiquiti Inc. in the United States and in other countries. All other trademarks are the property of their respective owners.